SAM24

HF Lowbay | Daylight harvest | RJ12 connector to control body

Benefits

Compact: Standard rectangular Plug&Play sensor design

Innovative: Robus HF antenna design against wireless interface

Intuitive: DALI sensitivity djustment

Applications

Master luminaire with sensor

Classrooms

Offices

Check Out the Complete System Solution on the Website:
https://www.hytronik.com/product/SAM24

Product Description

This sensor features microwave (HF) detection and daylight harvesting, it utilizes an RJ12 connector to interface with the control body. It offers intuitive DALI sensitivity adjustment and incorporates an innovative robust HF antenna design to mitigate wireless interference. It supports DALI-2 commands for seamless integration and control.

Functions and Features

See additional details at the end of datasheet

Ambient Daylight Threshold

DALI-2 Certified

Specifications

Main Capabilities	
Connector Type	RJ12

Sensor Data	
Detection angle	30° - 150°
Max. Detection range (Diameter)	12.0 m
Maximum Mounting Height	8.0 m
Detection area	113 m^2
HF operating frequency (Ghz)	5.8Ghz+/-75MHz
Detection Methods	Microwave (MW)

Electrical Data	
Operating voltage range	5 VDC
HF Transmission power	<0.5mW

Specifications

Technical	
Product weight	24.0 g
Product height	13.0 mm
Product length	40.4 mm
Product width	25.2 mm
Mounting hole	2.5 mm
Ambient temperature	-20 ~ +50 °C
Storage temperature	-40 ~ +70 °C
Humidity max	10 ~ 90%
IP Rate	IP20

Standard	
EMC	EN 55015, EN61000-3-2/-3-3, EN 61547
LVD	EN 61347-1, EN 61347-2-11
RED	EN 300440, EN301489-1/-3, EN 50663
Compliance	IEC62386_101, 103, 303, 304

Technical Drawing

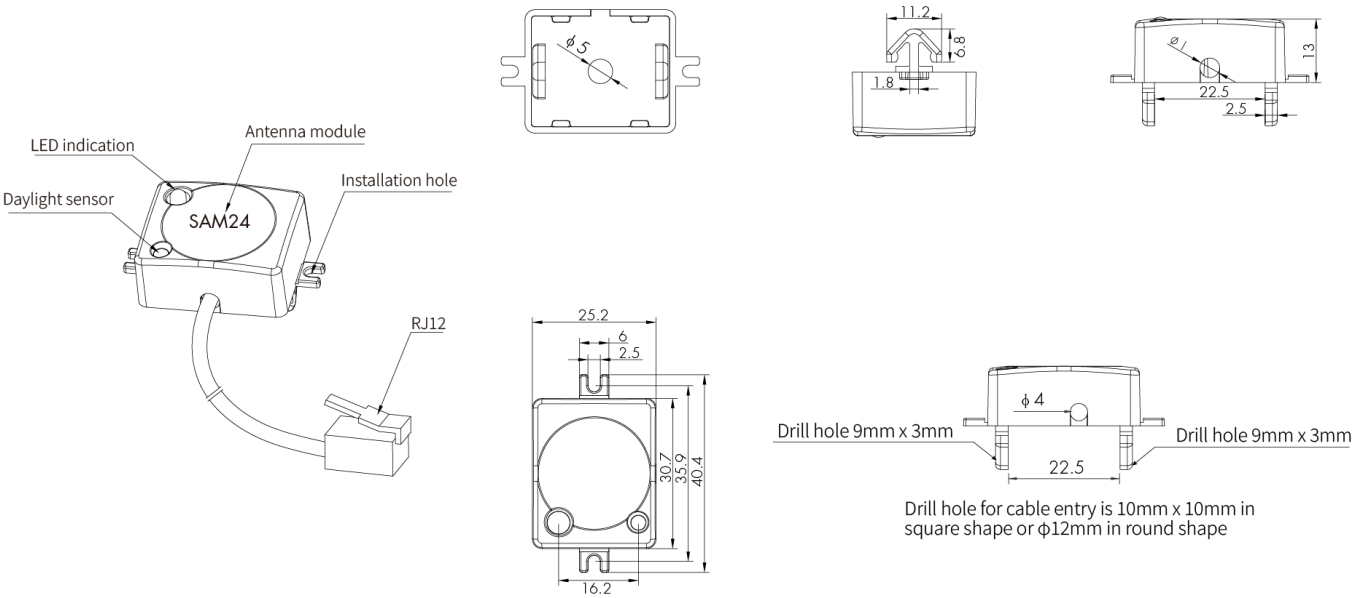

Wiring Diagram

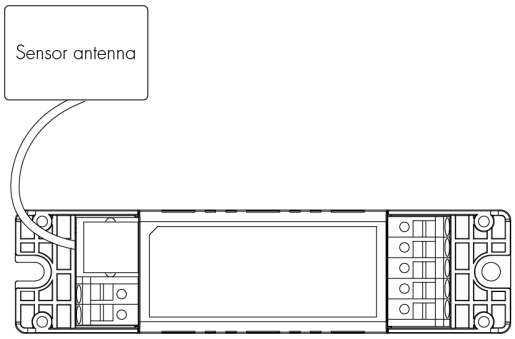

Detection Range

Single Person Walk (Ceiling mount)

The data below is tested under following conditions:
• Single person walking
• Sensor not connected to any driver that may have soft-on period
• Testing temperature Ta = 20°C

Detection example 3m mounting height:

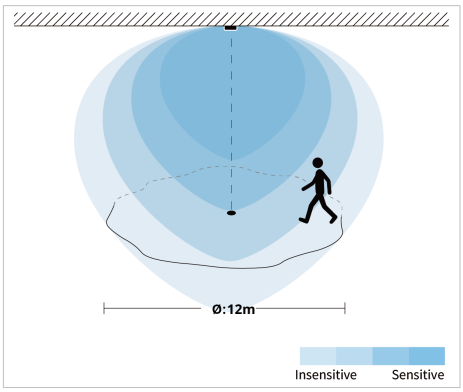

	Sensitivity			
H[m]	100%	75%	50%	10%
	{diameter}			
3	12	10	8	4
5	10	8	6	2
8	8	6	4	none

Detection schematic diagram

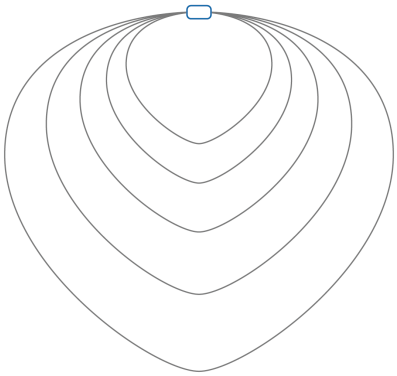

Commissioning Instructions and Precautions

A. Installation Note

1. This product should be installed by a qualifed electrician.

2. We recommend the mounting distance between sensor to sensor should be more than 2m to prevent sensors from false-triggering.

B. DALI-2 Compliance

1. This product has been tested in accordance with IEC 62386 and complies with the relevant DALI-2 application parts. DALI-2 testing was performed using the of cial DALI test sequence software (version 2.4.0.0), covering the applicable IEC 62386 parts (e.g. Part 101, Part 103, Part 303, Part 304). DALI-2 certi cation veri es compliance within the de ned test scope.

However, certification does not eliminate the possibility of system-level compatibility issues arising from differences in device implementation or system design among manufacturers. Therefore, functional veri cation and on-site testing are required as part of the nal system commissioning to ensure proper operation and compliance with project requirements.

C. DALI-2 Sensor Detection Sensitivity Adjustment

Please refer to: https://hytronik.com/media/1b/a1/05/1767775483/DALI_Sensor_Sensitivity_Adjustment.pdf?ts=1767775483

D. DALI-2 Instances & Functional Behavior

Please refer to: https://hytronik.com/media/a1/7b/cd/1767775493/DALI_2_Instances_and_Functional_Behavior.pdf?ts=1767775493

Warning: For additional important documents, including installation precautions, product guidelines, and guarantee conditions, please refer to the official downloads.

https://hytronik.com/service/downloads

Options

Compatible products (for full functionality)

HCD038/D2

Control unit | DALI-2 Command | Attachable sensor heads
www.hytronik.com/product/HCD038-D2

Functions and Features

Ambient Daylight Threshold

This feature allows users to set a custom daylight-harvesting target lux level based on the actual ambient light at the installation site. After manually adjusting the luminaire to a comfortable brightness, the user can record the current lux value as the new daylight threshold via the remote controller or the Koolmesh app. The sensor will then use this stored value as the reference for daylight-dependent dimming, ensuring a personalized and accurate daylight harvesting performance.

DALI-2 Certified

The product is DALI-2 certified, ensuring compatibility with DALI-2 control devices and compliance with relevant international lighting control standards. Certified product details can be verified via the DALI Alliance product database.

Check out for further explanation of features

https://hytronik.com/solutions/lighting-control-features