HBTD8200S/F

Bluetooth Receiver Node | Relay ON/OFF | Screw Mounting

Installation & Quick Start Guide

HYTRONIK® POWERED BY Koolmesh®

Subject to change without notice.

Date: 17.11.2026 | Edition: A2

Scan to check other languages and product data

1 Safety Information

WARNING

- Installation by a qualified electrician only and in accordance with local electrical regulations.
- Disconnect mains power before installation, wiring, maintenance or replacement.
- Failure to follow the wiring diagram may result in product damage and malfunction.
- Refer to the Wire Preparation section for recommended wire diameter and strip length.
- Push inputs are mains-voltage inputs and must only be connected to mains-rated switches.
- The Bluetooth antenna is located at the marked end of the device.
- Keep the antenna area clear of metal or conductive materials.
- Maintain at least 10 mm clearance around the antenna whenever possible for optimal wireless performance.
- Avoid installing the antenna section inside a metal enclosure or behind large metal structures.

2 Specifications

Dimming (Output) Interface	Relay On/Off
Bluetooth Platform	Nordic nRF52832
Bluetooth frequency	2.4 GHz - 2.483 GHz
Bluetooth range (Phone to Device)	10-30m
Bluetooth transmit power	4 dBm
Bluetooth system	Koolmesh
Operating voltage range	220-240 VAC 50 Hz
Stand-by power (Psb)	<0.5W
Load ratings	400VA(capacitive), 800W(resistive)
Insulation class	Class II
Ambient temperature	-20 ~ +45 °C
Storage temperature	-20 ~ +60 °C
Humidity max	20 ~ 90%
Case Temp.max	75.0 °C
IP Rate	IP20

3 Technical Drawing (Unit: mm)

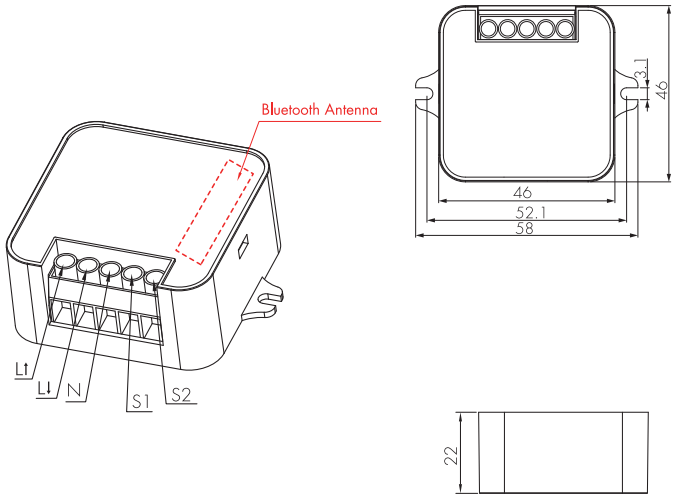

4 Wire Preparation



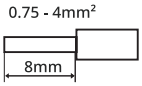

(min 6mm, max 11mm)

Use a Phillips screwdriver to loosen or secure the cable at the contact screw connections.

5 Wiring Diagram

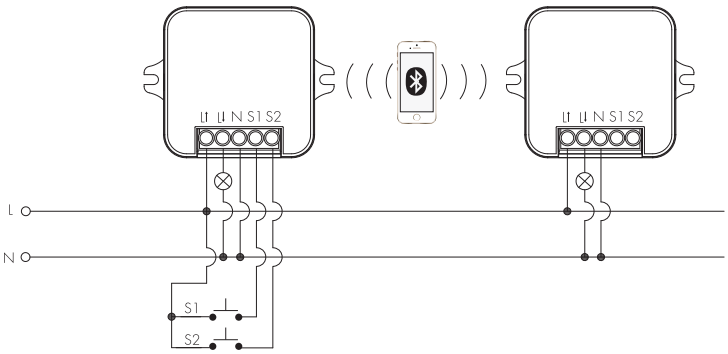

6 Installation Process

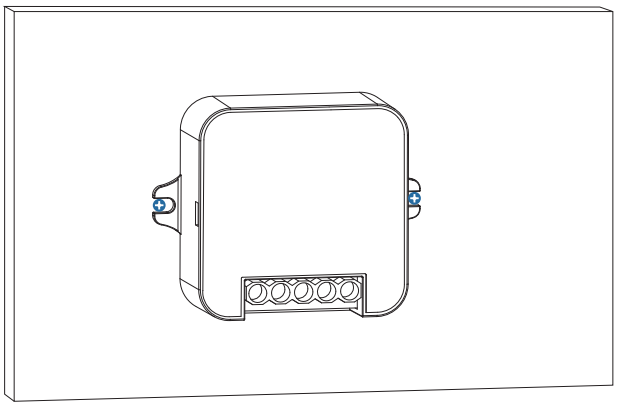

Screw Mounting

- Fix the unit securely in place with two fixing screws and ensure it is firmly mounted.

7 Koolmesh App Guide & Bluetooth Range

For additional information, please refer to:
http://faq.koolmesh.com/

iOS Android iPad Web

1 Phone/Pad to Device

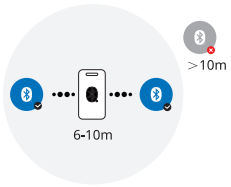

During commissioning, the installer must remain within Bluetooth range of the target device when adding it via the App.

2 Device to Device

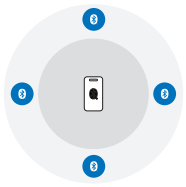

After commissioning, devices communicate through the mesh network. Users can access the network by connecting to any active mesh node.

8 Switch Input Function Configuration

PUSH functionality varies by model and may include physical PUSH, virtual PUSH, or both. Available functions can be configured via the Koolmesh App.

Physical PUSH: Supports momentary (non-latching) or latching wall switches connected via dedicated PUSH input terminals.

Virtual PUSH: Provides software-based PUSH control without requiring a physical wall switch or dedicated PUSH input terminals.

Normal PUSH mode: Single press, double press and press and hold can each be assigned a separate function. Each action triggers only its assigned function.

Switch function	Action	Description
Fire Alarm Function	Refer to https://support.koolmesh.com/	• Can be connected to a fire alarm system. • Once the fire alarm system is triggered, all luminaires controlled by the Push Switch will enter the preset scene (normally full ON). When the fire alarm system sends the end signal, all luminaires controlled by the Push Switch will return to normal operation.
ON/OFF Switch (Latching Switch)	/	• Upgrade a standard on/off control to Bluetooth control, enabling one latching switch to control multiple luminaires or zones while reducing wiring and the number of switches required.
Normal PUSH (Retractive Switch)	Single press (>0.1s) Double press Press and hold (>=1s)	• ON/OFF • ON only • OFF only • Recall this scene • Sensor take over • Not in use · Brightness dimming · Color temperature tuning * Application Notes: 1. Available functions vary depending on the press action. 2. ON/OFF: The PUSH ON/OFF function follows an alternating command sequence (ON - OFF - ON - OFF) based on the previous PUSH command, rather than the current luminaire state. Changes made by other controls, such as sensors or the App, do not reset this PUSH command sequence. Therefore, if the luminaire state has been changed by another control, two presses may sometimes be required to achieve the desired ON/OFF state. Where supported, separate ON only and OFF only commands can be used to avoid this behaviour. 3. Brightness dimming: With Cumulative Adjustment, luminaires that are already OFF within the group remain off during Dim- operation. This function is supported on nRF52832 V55 or later and all nRF52840 versions.
Sensor-Link	/	• Hold time/scene • Stand-by time/scene • Upgrade a normal on/off motion sensor to a Bluetooth-controlled motion sensor

For additional important documents, including installation precautions, product guidelines, and guarantee conditions, visit: https://hytronik.com/service/downloads